ITEM NO.	PART NO.	DESCRIPTION	QTY.
1	H212	flat washer, 9/16"ID x 1 1/16"OD, AN960-C916	3
2	B199	coupler, 1/2" fpt x 1/4" fpt	2
3	B644	barb, 1/2" barb x 1/4" mpt	2
4	B173	ferrule, 1/2", brass	4
5	PH615-30	sol hose, 1/2", silicone braided, clear	1
6	H273	nut, kep, #10-32 zinc	18
7	H210	washer, 1/4" flat, s/s	32
8	H186	screw, 10-32 x 3/4, phil, flat, countersunk, s/s, black	10
9	C381	pump out, 3.3 gpm, 115v	1
10	PH615-37	sol hose, 1/2", silicone braided, clear	1
11	B160	adapter, brass, 1/2" barb x 3/8" fsw, ball end	2
12	H042	c-clip, 12mm, external	2
13	H109	wheel, 10", foam filled	2
14	H232	axle, 18.80" x .50"	1
15	P511	LX series base	1
16	P514	vent, side, LTD	2
17	H668	caster, 4", black hub & gray tread	2
18	H342	bolt, 1/4-20 x 1" hex head, s/s	8
19	H216	nut, lock, 1/4-20, nylon insert, s/s	14
20	H202	bolt, 1/4-20x3/4" hex head	4
21	C342	pump, 500 PSI, pumptec, 120V/230V	1
22	B104	bushing, brass, 1/4" mpt x 1/8" f	3
23	B103	elbow, 90 deg street, 1/4"mpt x 1/4" fpt	2
24	B260A	quick disconnect, 1/4" mqd x mpt, open-spray	3
25	B259A	qd, brass, 1/4" fqd x fpt	3
26	B136	elbow, brass, 90 deg, 1/4" mpt x 1/4" mpt	2
27	AH184	hose, 3/8" x 14-1/2" (OAL), f	1
28	PH615-23	sol hose, 1/2", silicone braided, clear	1
29	AH118	sol hose, 1/4" x 39", 1/4" fsw x 1/4" fpt	4
30	B127	plug, brass, 1/4"mpt, hex	1
31	H486	latch, front, set, large	2
32	G068	bumper, 7/8" x 1/4" head	2
33	H230	screw, 10-32 x 1/2" phil pan head, s/s	18
34	E360	flanged male inlet recaptacle, 230V, 20A	2
35	E564	controller, circuit light, audible	1
36	E632	relay, shut-off switch, mechanical float, 115v	2
37	G165	cover, relay	2
38	B101	qd, brass, 1/4" m	1
39	B204	quick disconnect, 3/4" fm x 3/4" fm, garden hose	1
40	B205B	quick disconnect, 1/2" mpt x 3/4" mqd, garden hose	1
41	B656A	valve, ball, 1/2" mpt x 1/2" fpt, s/s	1
42	H039	plate, auto fill/ pump out	1
43	B107	nipple, hex, 1/4"mpt x 1/4"mpt	5
44	B208	coupling, 3/8" fpt x 1/4" fpt	1
45	B186	elbow, 90 deg street, 3/8"mpt x 3/8" fmpt	3
46	H299	washer, 11/16"id x 1-1/2"od x .075, s/s	9
47	B105	bushing, brass, 3/8"mpt x 1/4"	2
48	B303	nipple, 3" x 1/4" npt x 1/4" npt	3
49	B142	coupling, brass, 1/4" fpt x 1/4" fpt	2
50	B167	elbow, 90 deg street, 1/2" fpt x 1/2" mpt	3
51	B198	adapter, 3/4" fgh x 1/2" mpt, w/ gasket	1
52	H541A	valve, float, autofill	1
53	B216	nipple, brass, 3/8" x close	2
54	B210	bushing, brass, 1/2"mpt x 3/8" fpt, hex	2
55	B119A	filter, strainer, 1/2" fpt	1
56	H213	washer, 1/4" lock, s/s	5
57	H201	bolt, 1/4-20 x 1/2", hex head, zinc	2
58	H378	bracket, front hinge, sp/fb	1
59	H204	bolt, 1/4-20 x 1 3/4" hex head, s/s	2
60	B170	ferrule, 1/4" brass	6
61	PH634-18	sol hose, 1/4", silicone braided, clear	1
62	B131	fitting, 1/4" barb x 1/8" FPT	2

ITEM NO.	PART NO.	DESCRIPTION	QTY.
63	B143	street elbow, 90 degrees, 1/8"	2
64	B129	nipple, hex, 1/8" mpt x 1/8" mpt	2
65	H325	flow meter, electric truckmount	1
66	G069	gasket, flow meter	1
67	H246	screw, 8-32 x 3/8" SHCS, alloy, Black	2
68	H547	hanger, wire for injection sprayer	1
69	G036	cap, 2.5" threaded, tethered	2
70	P535	bottle, 5 quart, w/ caps	1
71	B117	strainer, with check, chemical injector	1
72	H456B	cap (only) w/ hole	1
73	PH634-26	sol hose, 1/4", silicone braided, clear	1
74	H485	handle, aluminum grip, black	1
75	G052	washer, buna 1-1/8" od x 3/16" id	2
76	H211	washer, 1/4"id x 1"od, flat, s/s	2
77	H768	bolt, 1/4-20 x 3/4" serrated hex flange, zinc	2
78	P509	LX series sol tank	1
79	H650	bolt, shoulder, 5/16" x 1-1/2" soc, s/s	1
80	P513	solution tank lid, LTD	1
81	H390A	bracket, "L"	2
82	H770	bolt, 1/4-20 x 1/2" serrated hex flange, zinc	4
83	H124V	Cuff-Lynx, 2" fem cuff x 2" male thread starter cuff, vinyl	1
84	PH634-20	sol hose, 1/4", silicone braided, clear	1
85	H164	grommet, 5/8" ID	2
86	B109	barb, 1/4" barb x 1/4" mpt	2
87	H484	plate, mounting, QD	1
88	C313C	regulator, 450 psi, silver spring	1
89	B135	tee, 1/4" mpt x 1/4" mpt x 1/4" mpt	1
90	B102	quick disconnect, 1/4" fqd x 1/4" fpt	1
91	B656	valve, ball, 1/4" fpt x 1/4" fpt, s/s	1
92	PH634-36	sol hose, 1/4", silicone braided, clear	1
93	H308D	gauge, pressure, 2000 PSI	1
94	E512B	light, indicator, blue	1
95	E515	switch, rocker, 2 position	4
96	H029	screw, plastite, 10 x 1/2", s/s	2
97	H074	plate, switch, ltd5, ltd12	1
98	H031	screw, plastite, 10 x 1"	2
99	P512	LX series switchbox	1
100	H135V	Cuff-Lynx, 2" male cuff x 2" mpt, vinyl	1
101	H314	nut, lock, 1-1/2", steel	1
102	P520	adapter, 1.5" mpt pvc	1
103	PH633-9	PIPE, PVC, 1-1/2" x 9-1/2" LG.	1
104	P503	adapter, 1.5" pvc, 45 deg, fslip	2
105	PH633-5	pipe, pvc, 1-1/2"	1
106	PH633-1	pipe, pvc, 1-1/2"	1
107	G090	lid, vac tank, clear, 7"	1
108	H304	screw, #8 x 5/8 phil oval, s/s	6
109	G091	gasket, 7", vac lid	1
110	G003	filter, foam, 2", vac stack, 1/2"	1
111	G097	filter, screen mesh, 1.90" dia	1
112	E400	switch, mechanical float, for pumpout	2
113	H217	clamp, hose, 2-1/4 dia	6
114	A926	elbow, inlet assembly 2"	1
115	A145	Handle, Wheel Kit, LTD	1
116	H225	valve, drain, 1-1/2"	1
117	P510	LX series vac tank	1
118	H333	mesh filter, auto dump, 1/2" npt	1
119	H194	coupler, 2" dia x 2.5" length, s/s	1
120	PH628-7	vac hose, 2", black, wire reinforced	1
121	C347	vac motor, lx, hybrid, 173 cfm, 120v	1
122	H202	bolt, 1/4-20 x 3/4" hex head, s/s	5
123	H096	bolt, hex, 1/4-20 x 4", zinc finish	3
124	H503	vac support, 3 stage, 3.25", no thrds	3

ITEM NO.	PART NO.	DESCRIPTION	QTY.
125	C351	vac motor, lx, hybrid, w/inlet tube, 173 cfm, 120v, low amp	1
126	H469-A	bracket, vac motor, 6.6", u-shape	1
127	PH628-24	vac hose, 2", wire reinforced	1

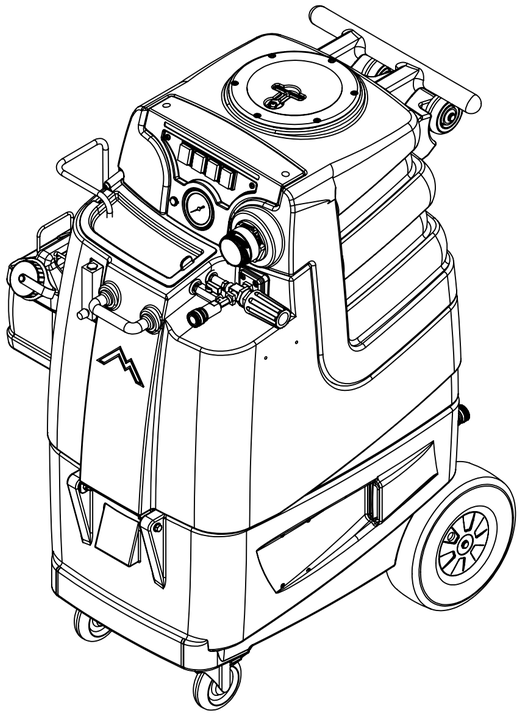

	NAME	DATE
DRAWN	M.LaBarbera	11/2019
CHECKED		

COMMENTS:

PROPRIETARY AND CONFIDENTIAL
THE INFORMATION CONTAINED IN THIS DRAWING IS THE SOLE PROPERTY OF MYTEE PRODUCTS, INC. ANY REPRODUCTION IN PART OR AS A WHOLE WITHOUT THE WRITTEN PERMISSION OF MYTEE PRODUCTS, INC. IS PROHIBITED.

MYTEE PRODUCTS, INC.
858-679-1191

TITLE: Speedster LX

SIZE C | DWG. NO. LTD12-LX | REV OD

SCALE: 1:32 | DO NOT SCALE DRAWING | SHEET 1 OF 5

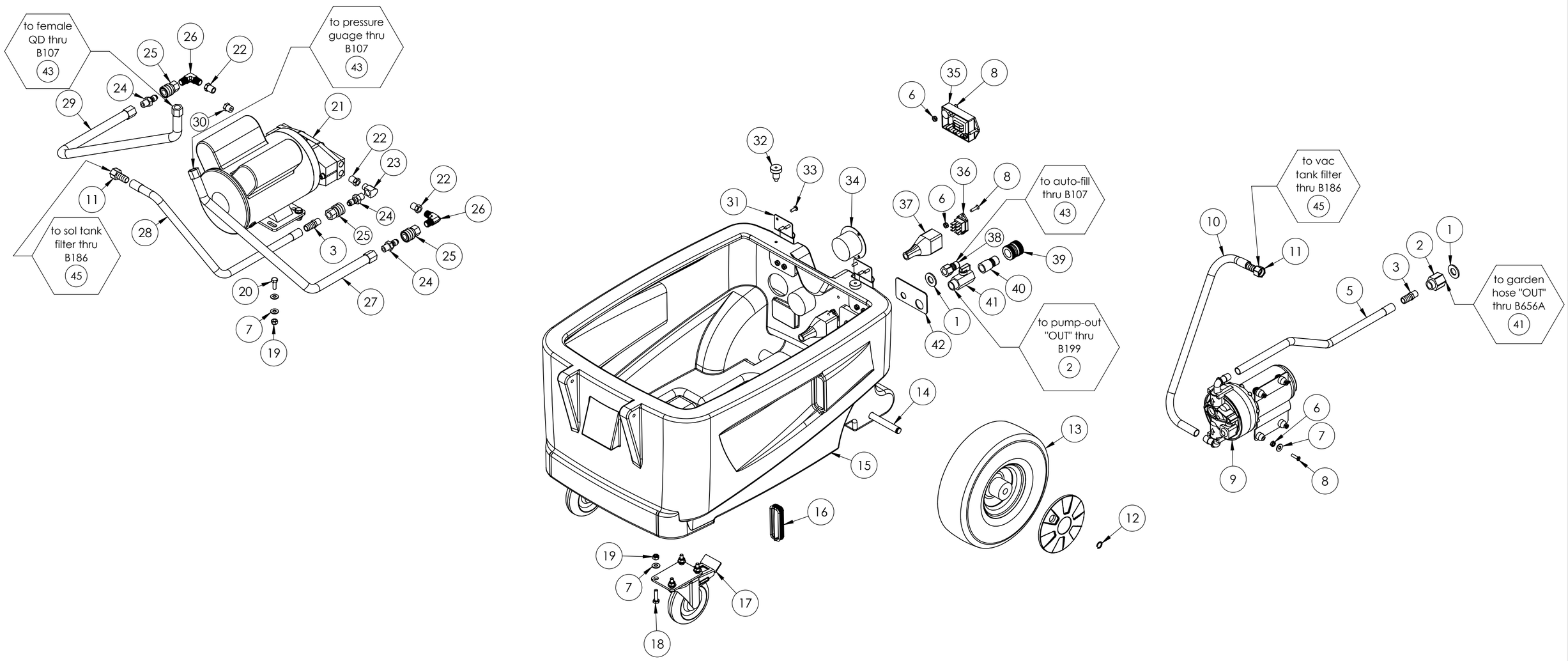

	NAME	DATE
DRAWN	M.LaBarbera	11/2019
CHECKED		

COMMENTS:

PROPRIETARY AND CONFIDENTIAL

THE INFORMATION CONTAINED IN THIS DRAWING IS THE SOLE PROPERTY OF MYTEE PRODUCTS, INC. ANY REPRODUCTION IN PART OR AS A WHOLE WITHOUT THE WRITTEN PERMISSION OF MYTEE PRODUCTS, INC. IS PROHIBITED.

MYTEE PRODUCTS, INC.
858-679-1191

TITLE:

Speedster LX

SIZE	DWG. NO.	REV
C	LTD12-LX	OD

SCALE: 1:32 | DO NOT SCALE DRAWING | SHEET 2 OF 5

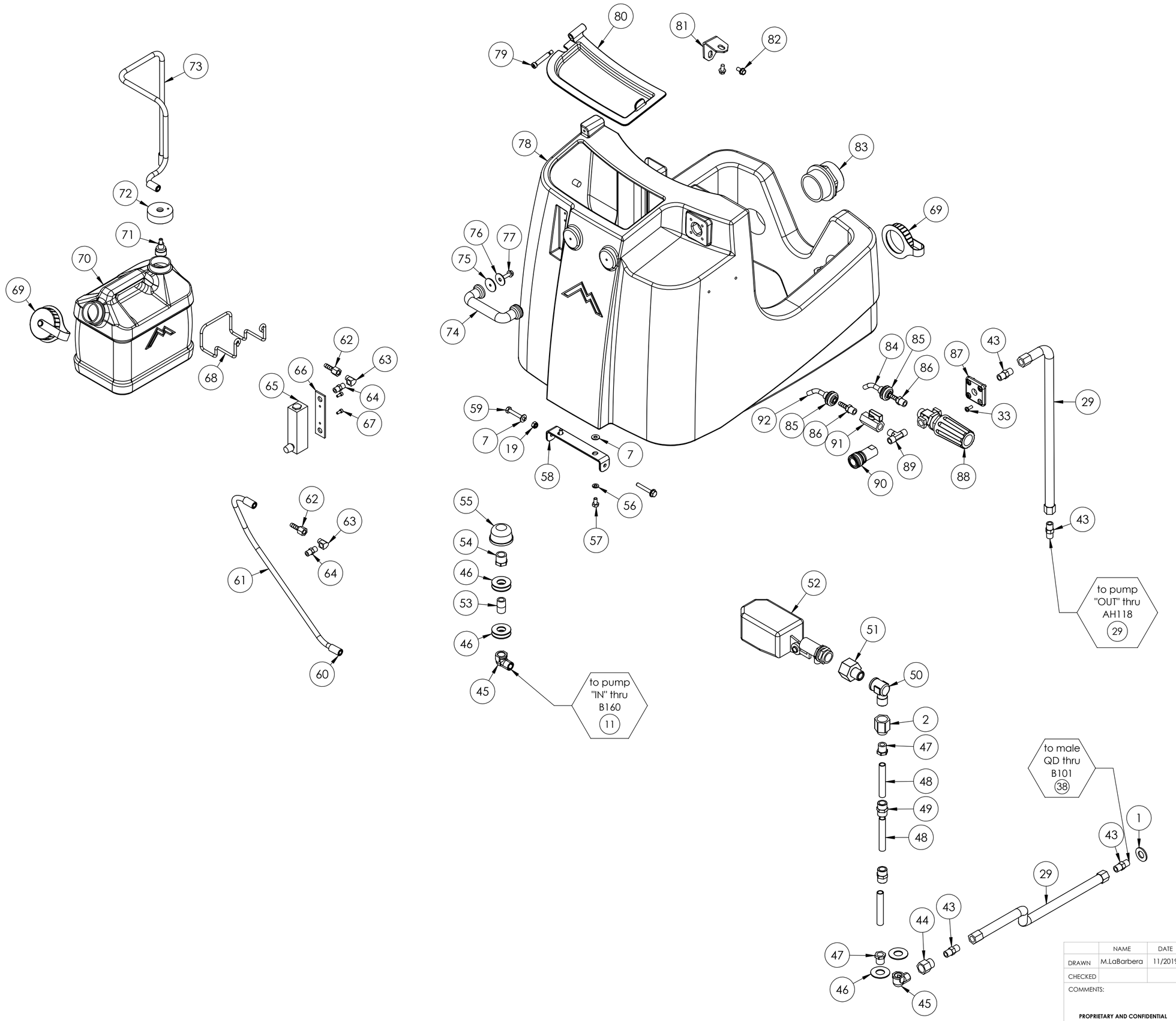

	NAME	DATE
DRAWN	M.LaBarbera	11/2019
CHECKED		

COMMENTS:

PROPRIETARY AND CONFIDENTIAL
THE INFORMATION CONTAINED IN THIS DRAWING IS THE SOLE PROPERTY OF MYTEE PRODUCTS, INC. ANY REPRODUCTION IN PART OR AS A WHOLE WITHOUT THE WRITTEN PERMISSION OF MYTEE PRODUCTS, INC. IS PROHIBITED.

MYTEE PRODUCTS, INC.
858-679-1191

TITLE:

Speedster LX

SIZE	DWG. NO.	REV
C	LTD12-LX	OD

SCALE: 1:32 | DO NOT SCALE DRAWING | SHEET 3 OF 5

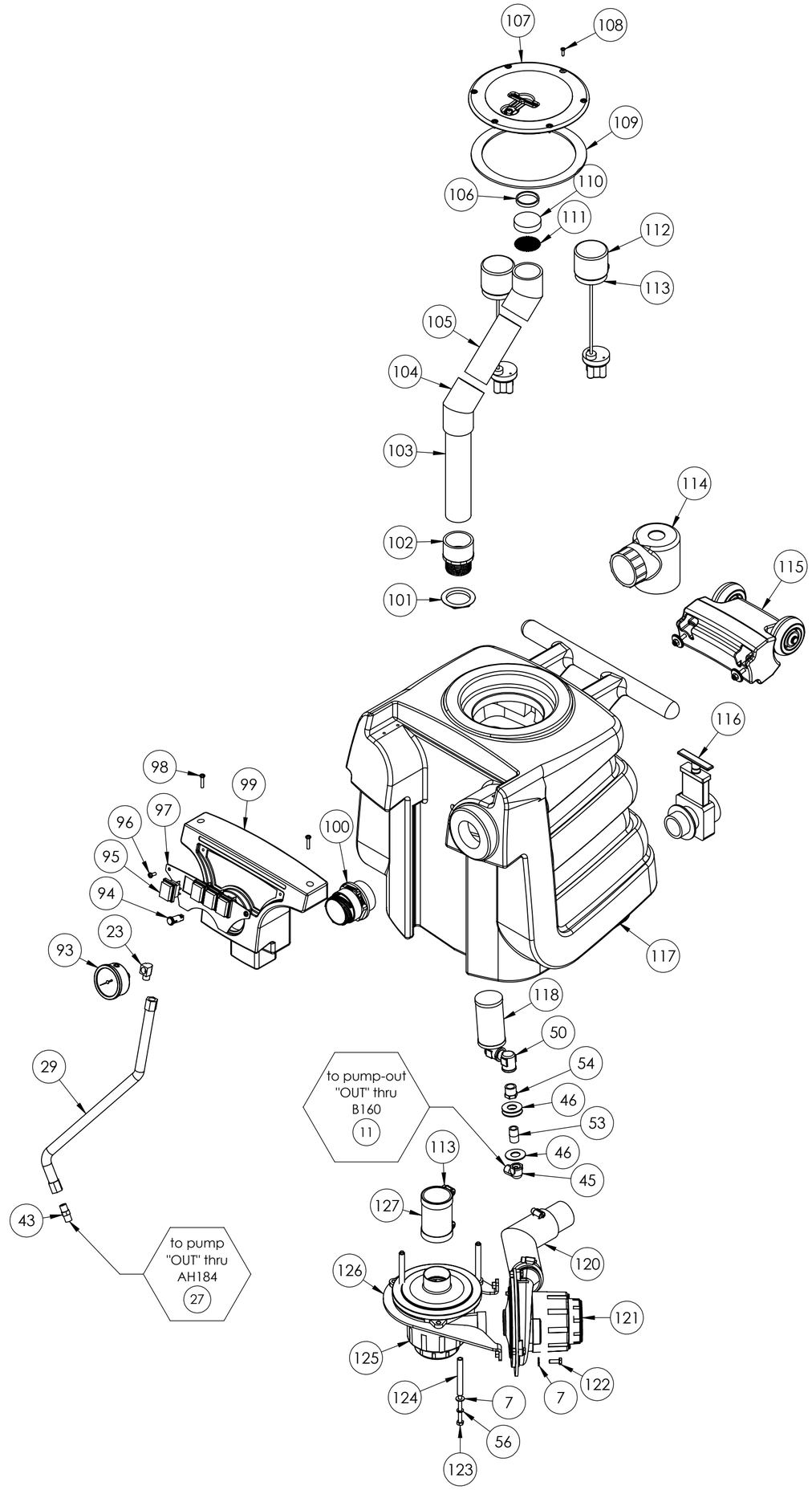

	NAME	DATE
DRAWN	M.LaBarbera	11/2019
CHECKED		

COMMENTS:

PROPRIETARY AND CONFIDENTIAL

THE INFORMATION CONTAINED IN THIS DRAWING IS THE SOLE PROPERTY OF MYTEE PRODUCTS, INC. ANY REPRODUCTION IN PART OR AS A WHOLE WITHOUT THE WRITTEN PERMISSION OF MYTEE PRODUCTS, INC. IS PROHIBITED.

MYTEE PRODUCTS, INC.
858-679-1191

TITLE:

Speedster LX

SIZE	DWG. NO.	REV
C	LTD12-LX	OD

SCALE: 1:32 | DO NOT SCALE DRAWING | SHEET 4 OF 5

ITEM NO.	PART NO.	DESCRIPTION	QTY.
1	H042	c-clip, 12mm, external	2
2	H358B	wheel, 3"	2
3	H507	axle, 13.10" x .50" dia	1
4	H210	washer, 1/4" flat, s/s	2
5	H169	bolt, 1/4-20 x 2", hex head	2
6	P650	wheel handle, LTD	1
7	G052	washer, buna 1-1/8" od x 3/16" id	2
8	H211	washer, 1/4"id x 1"od, flat, s/s	2
9	H216	nut, lock, 1/4-20, nylon insert, s/s	2

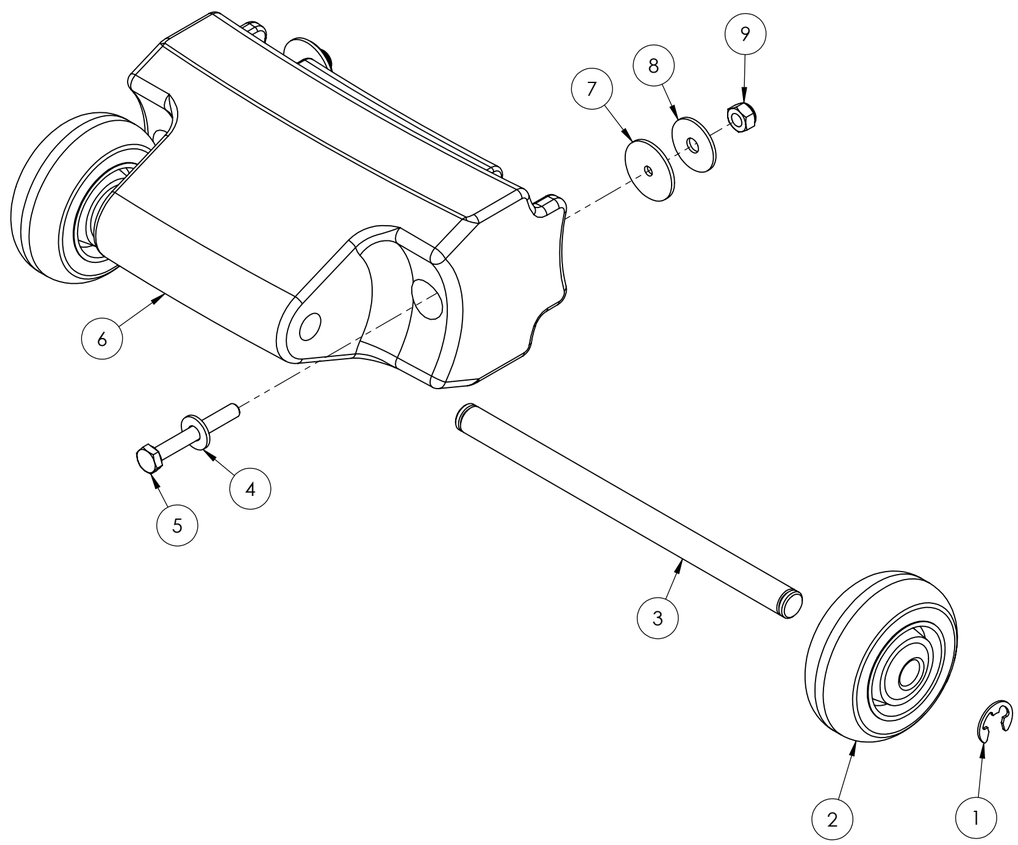

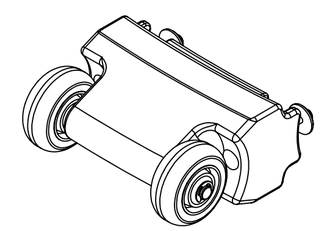

	NAME	DATE
DRAWN	M.LaBarbera	3/2019
CHECKED		

COMMENTS:

PROPRIETARY AND CONFIDENTIAL

THE INFORMATION CONTAINED IN THIS DRAWING IS THE SOLE PROPERTY OF MYTEE PRODUCTS, INC. ANY REPRODUCTION IN PART OR AS A WHOLE WITHOUT THE WRITTEN PERMISSION OF MYTEE PRODUCTS, INC. IS PROHIBITED.

MYTEE PRODUCTS, INC.
858-679-1191

TITLE:
Handle, Wheel Kit, LTD

SIZE	DWG. NO.	REV
C	LTD12-LX	OD

SCALE: 1:4 | DO NOT SCALE DRAWING | SHEET 5 OF 5